NOTE	REV A	PART NO. B705-239-J11

REFER TO SUN HYDRAULICS' TECHNICAL LITERATURE & CATALOGUE FOR DETAILS OF CARTRIDGE STANDARD SETTINGS, ADJUSTMENT RANGES, MAXIMUM PRESSURE RATINGS, SEAL MATERIAL, TORQUE VALUES, ETC.

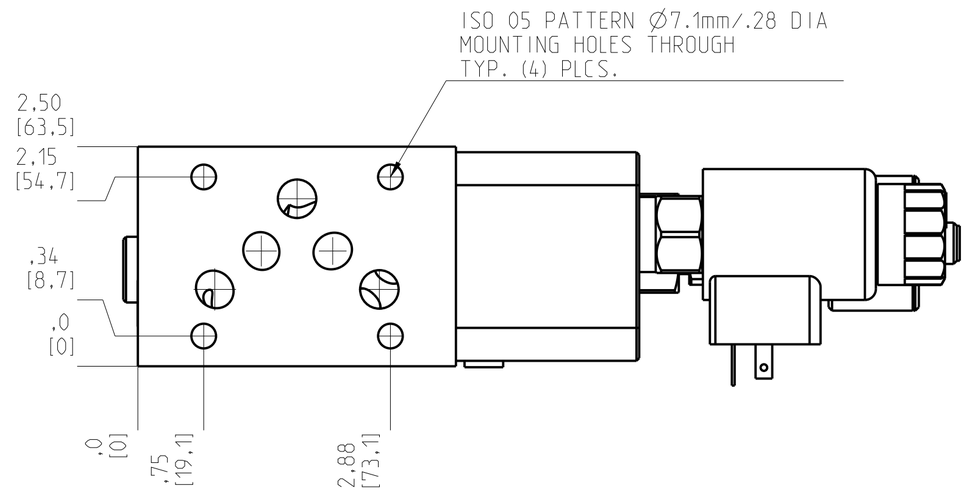

VIEW: A

PLUG CONNECTOR M12x1
PIN ASSIGNMENT

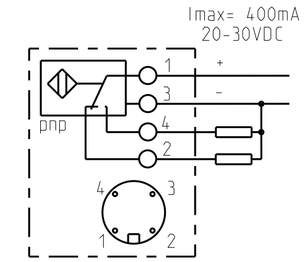

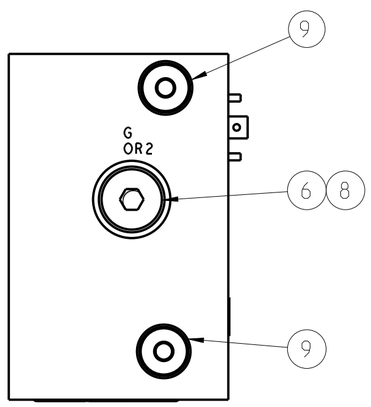

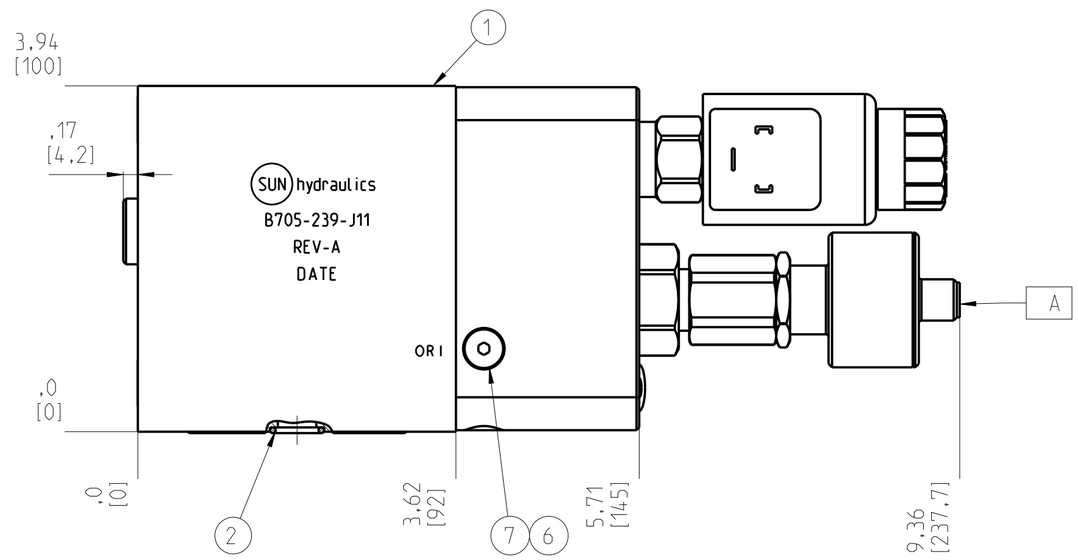

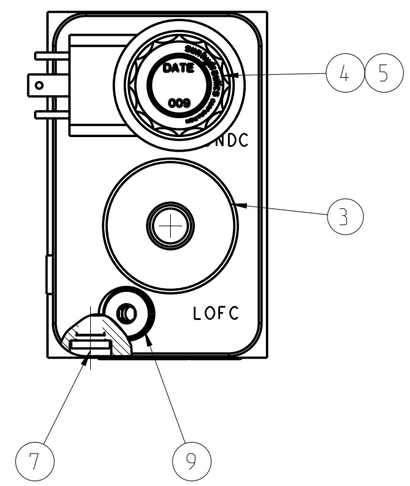

SCHEMATIC: B705-239-J11

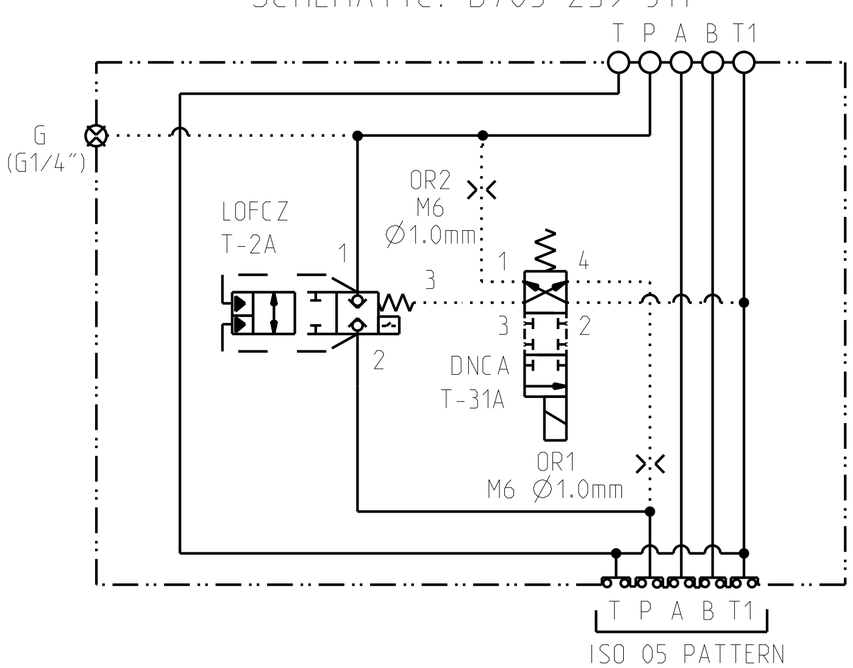

M = 6,5 [kg]	
W = 14,30 [lbs]	

ITEM	PART NUMBER	PART NAME	QTY
9	A330-006-004	4HP50N-S SAE 4 PLUG	3
8	330-018-002	.250-19 BSPP PLUG	1
7	A330-006-002	2HP50NS SAE 2 PLUG	2
6	280-050-007	ORIFICE M6 - Ø1.0mm	2
5	770-224	COIL 24VDC	1
4	DNCA-XLN	4/2 WAY SOLENOID VALVE	1
3	LOFC-ZDN	2/2 WAY LOGIC VALVE	1
2	500-001-014	O-RING Ø12.4x1.78 BUNA-N 70SHORE	5
1	17E-030	BLOCK	1

SHEET 1 OF 1

LET	REVISION	DATE	DRN	CHK	REL
A	FIRST RELEASE	08AUG17	RSE		

DIMENSION TOL
.XX = ± .015
.XXX = ± .005
MACHINING STANDARD
S-180
ANGLE TOL ± 1°
FINISH 80
REMOVE ALL BURRS
.005 MAX. BREAK

TITLE SANDWICH BODY ISO 05 SWITCHING CONTROL IN P			REV. A / PART NO. B705-239-J11
SCALE 4:5	REF.	MATERIAL DUCTILE IRON	
DRAWN RSE	CHECK AS	RELEASE	HEAT TREAT & FINISH DEWATERING OIL ONLY
DATE 31JUL17	DATE 31JUL17	DATE 08AUG17	

sun hydraulik GmbH
Brüsseler Allee 2
D-41812 Erkelenz
www.sunhydraulik.de

© 2017 SUNHYDRAULIK GMBH