Rev.	Revision note	Rev. Date	Sign
A	Updated hydraulic digagram	2014-05-07	MAN

EXTRA LONG cc 100mm

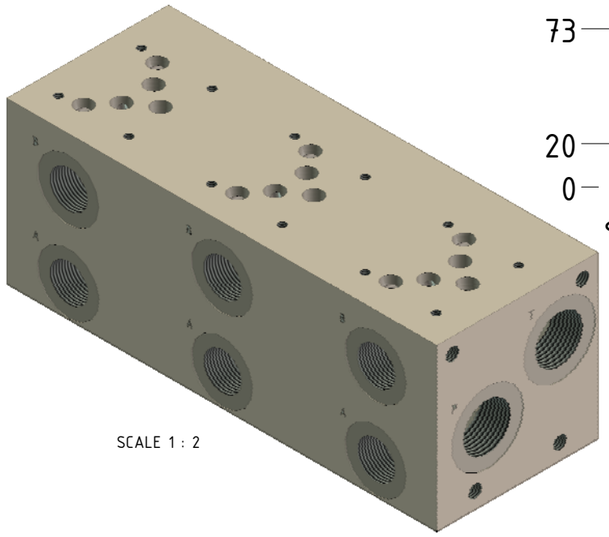

SCALE 1 : 2

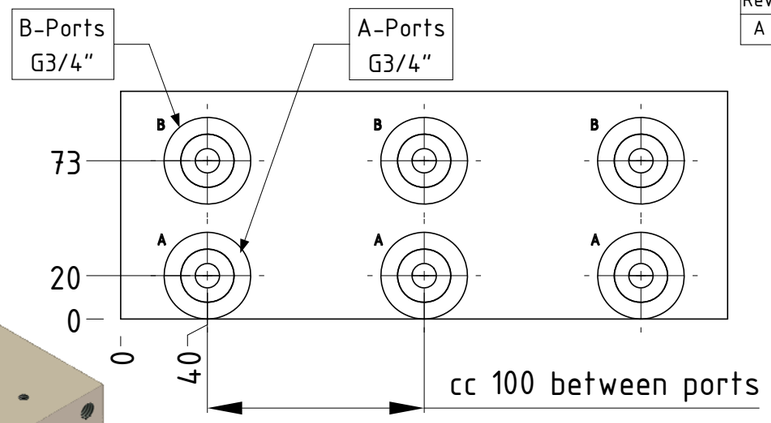

PORT SIZES:
P, T = G1"
A, B = G3/4"
MP, MA, MB = G1/4"

ISO 05 / NG10 pattern

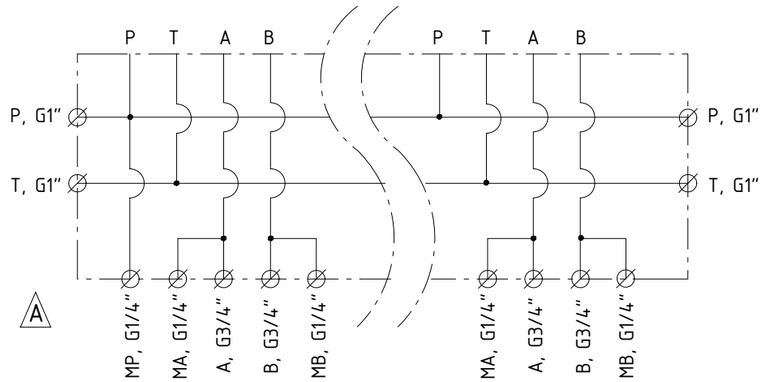

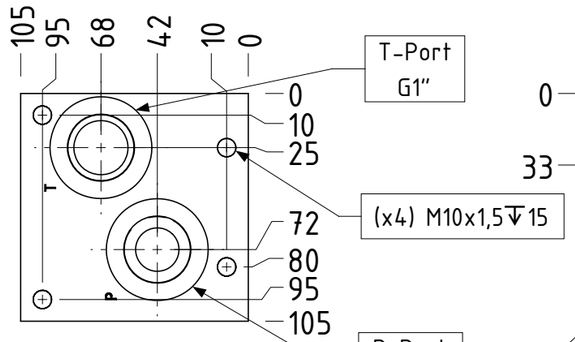

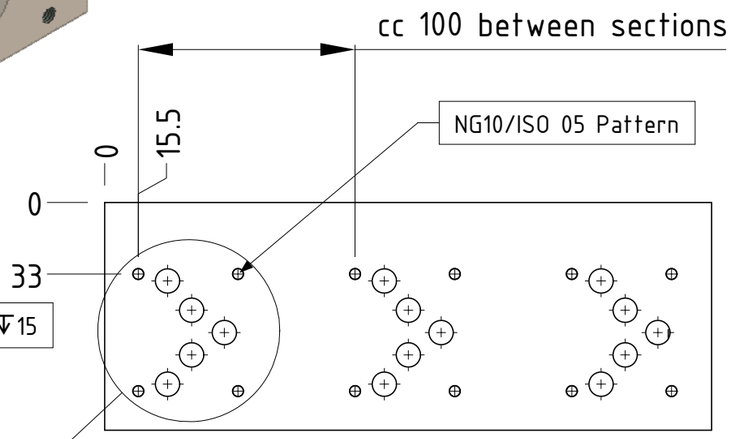

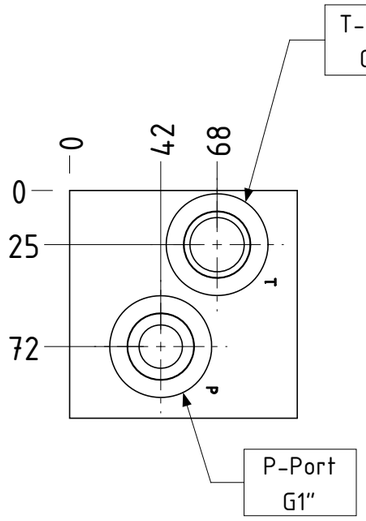

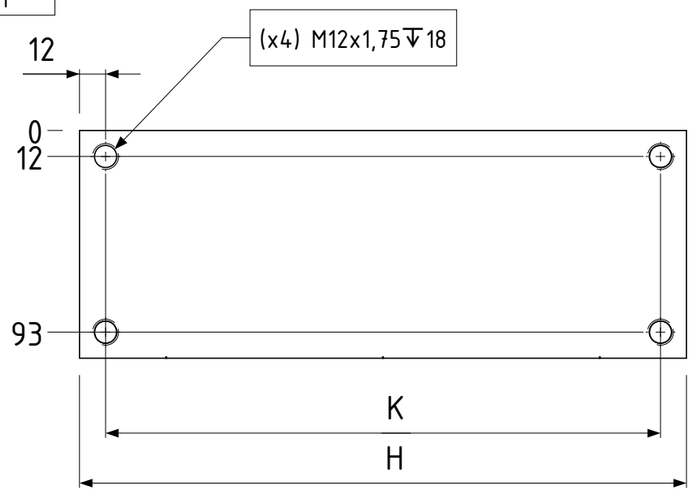

NG10/ISO05 Pattern

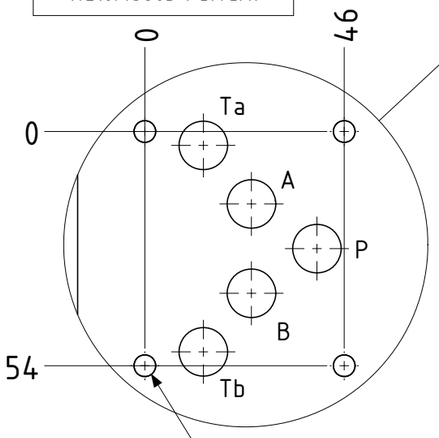

(x4) M6x1,0↧12

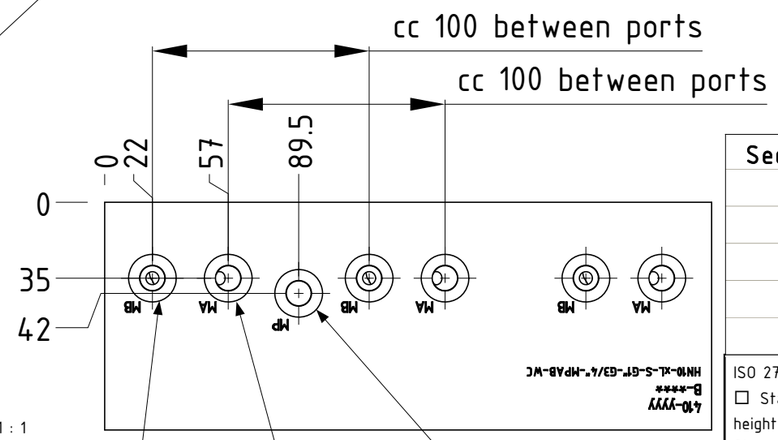

SCALE 1 : 1

MB-Ports G1/4"

MA-Ports G1/4"

MP-Port G1/4"

Section	Part Name	Hydnet Part no	Weight [kg]	K	H
2	HN10-2L-S-G1"-G3/4"-MPAB-WC	410-0062	14	156	180
3	HN10-3L-S-G1"-G3/4"-MPAB-WC	410-0063	23	256	280
4	HN10-4L-S-G1"-G3/4"-MPAB-WC	410-0064	31	356	380
5	HN10-5L-S-G1"-G3/4"-MPAB-WC	410-0065	40	456	480
6	HN10-6L-S-G1"-G3/4"-MPAB-WC	410-0066	48	556	580

ISO 2768-1 Medium, Ra=3,2µm
☐ Stamp framed text on surface, height = 4mm.
Sharp edges chamfered.

Material: Steel S335J2G3

Heat treat, finish: WC = Zinc plate silver passivate

Status: RELEASED

Dimensions: Hx105x105

Block: -

Hydnet art nr: 410-yyyy

Design: OBD | Drawn: MAN | Check: OBD

Net. weight: - kg

See drawing: 3D02452, M02453

HYDNET ab

1:st angle projection

Depth

Title: HN10-xL-S-G1"-G3/4"-MPAB-WC

Scale: 1:2 | Size: A2 | Created date: 2010-09-28

Drawing: L02454A.icd | Sheet 1(1) | Rev. A