Rev.	Revision note	Rev. Date	Sign

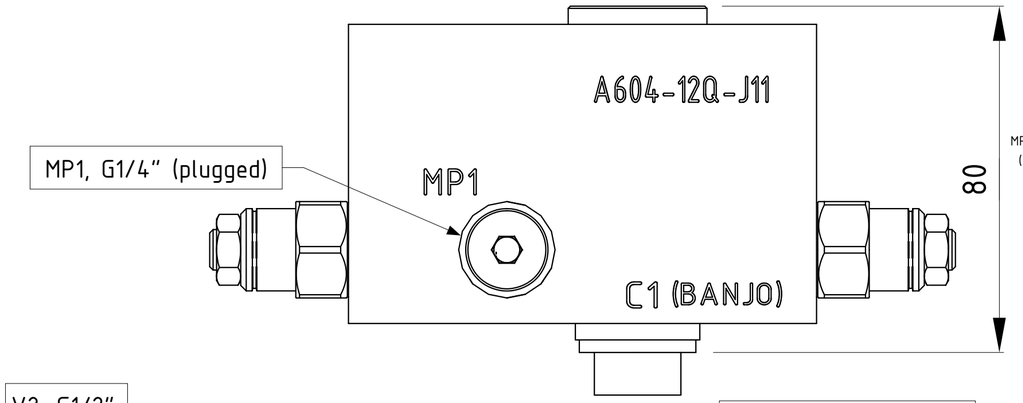

SYMBOL:

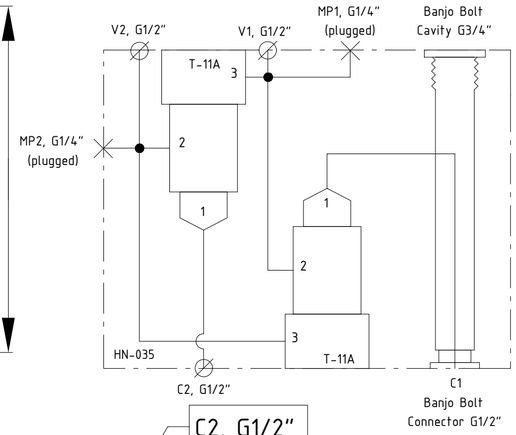

FUNCTION:

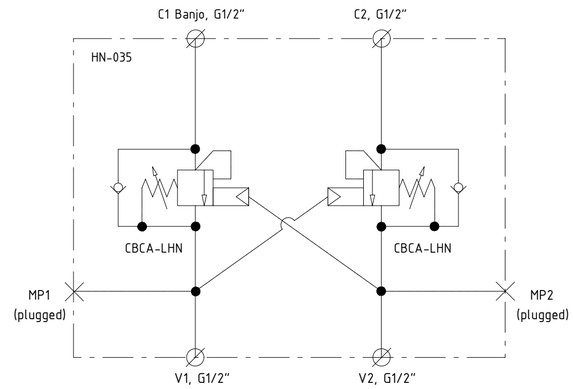

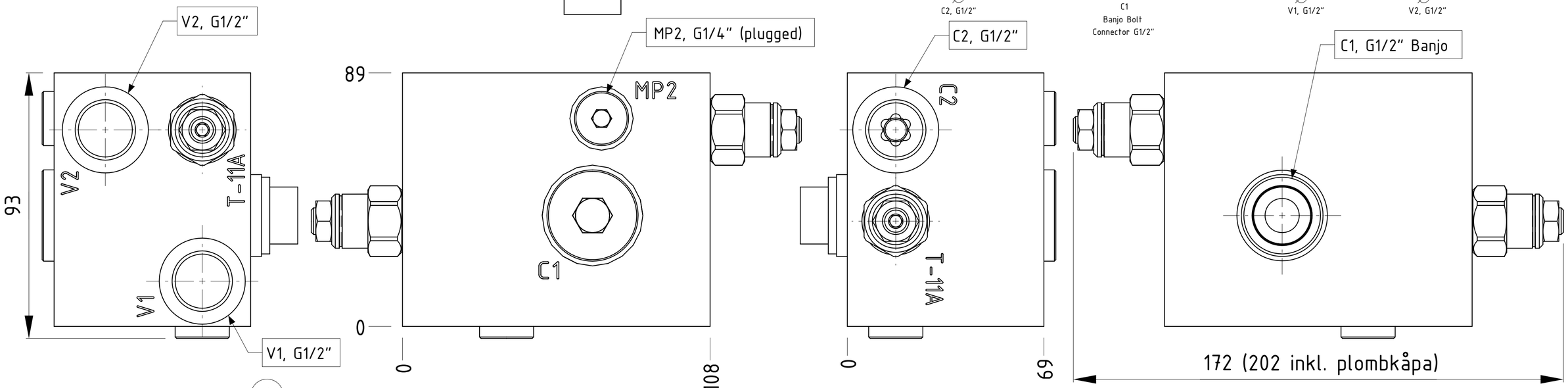

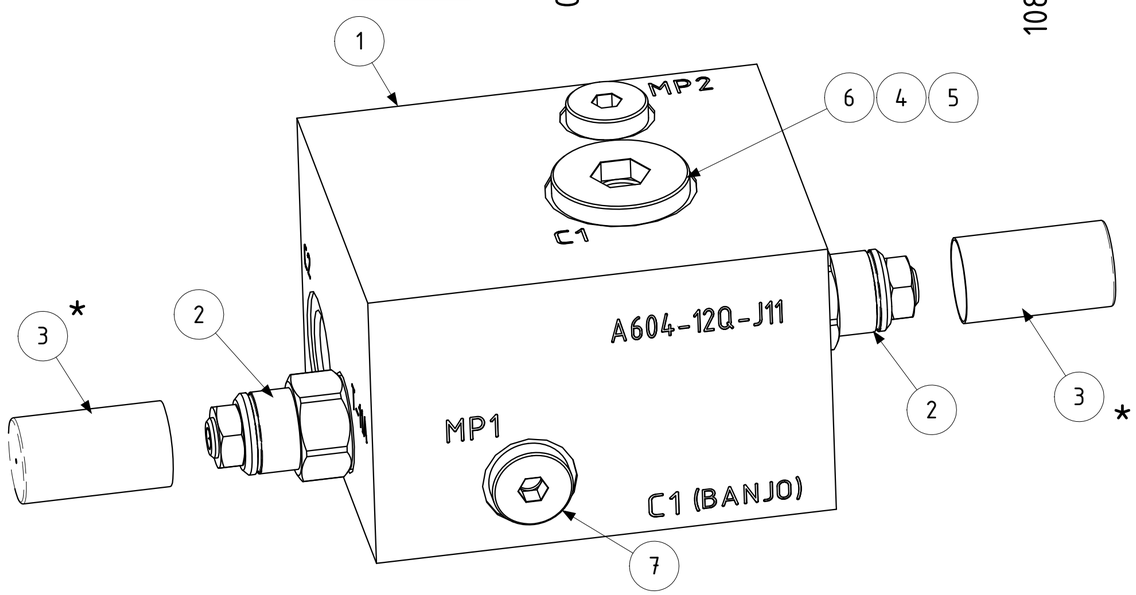

* = Pos 3, plombkåpa, levereras löst.

#	Qt	Part Number	Description	Hydnet art nr	[kg]	Installation
7	2	VSTI G1/4"-ED	VSTI Plug G1/4"	685-0041	0.	20 Nm
6	1	VSTI G3/4"-ED	VSTI Plug G3/4"	685-0044	0.1	90 Nm
5	1	EDE-R 1/2"	Tätning till banjo	685-0126	-	-
4	1	BSCH G1/2"-ED	Banjokoppling	685-0081	0.1	50 Nm
* 3	2	Plombkåpa serie 1 991-	Plombkåpa serie 1	200-0012	0.1	-
2	2	CBCA-LHN	Counterbalance T-11A 3:1 70-280bar	211-0001	0.2	45-50 Nm
1	1	HN-035 2xT-11A Banjo	Ventilblock A604-12Q-J11	412-0025	3.9	G1/2" Banjo

ISO 2768-1 Medium, Ra=3,2µm
☐ Stamp framed text on surface, height = 4mm.
Sharp edges chamfered.

Material	Heat treat, finish	Status	Dimensions	Block	Hydnet art nr
Ductile Iron	Dewatering Oil	RELEASED	69x89x108	HN-035	412-0025M4
		Design MAN / Drawn MAN / Check OBD	Net. weight ~4,4 kg	See drawing 3D03405	

HYDNET ab

1:st angle projection

Depth

Title: HN-035 Kompl.mont. inkl. CBCA-LHN Banjoblock G1/2"

Scale	Size	Created date
1:1	A2	2016-07-14

Drawing: L03406.icd

Sheet 1(1) Rev. -