| Rev. | Revision note | Rev. Date | Sign |
|---|---|---|---|

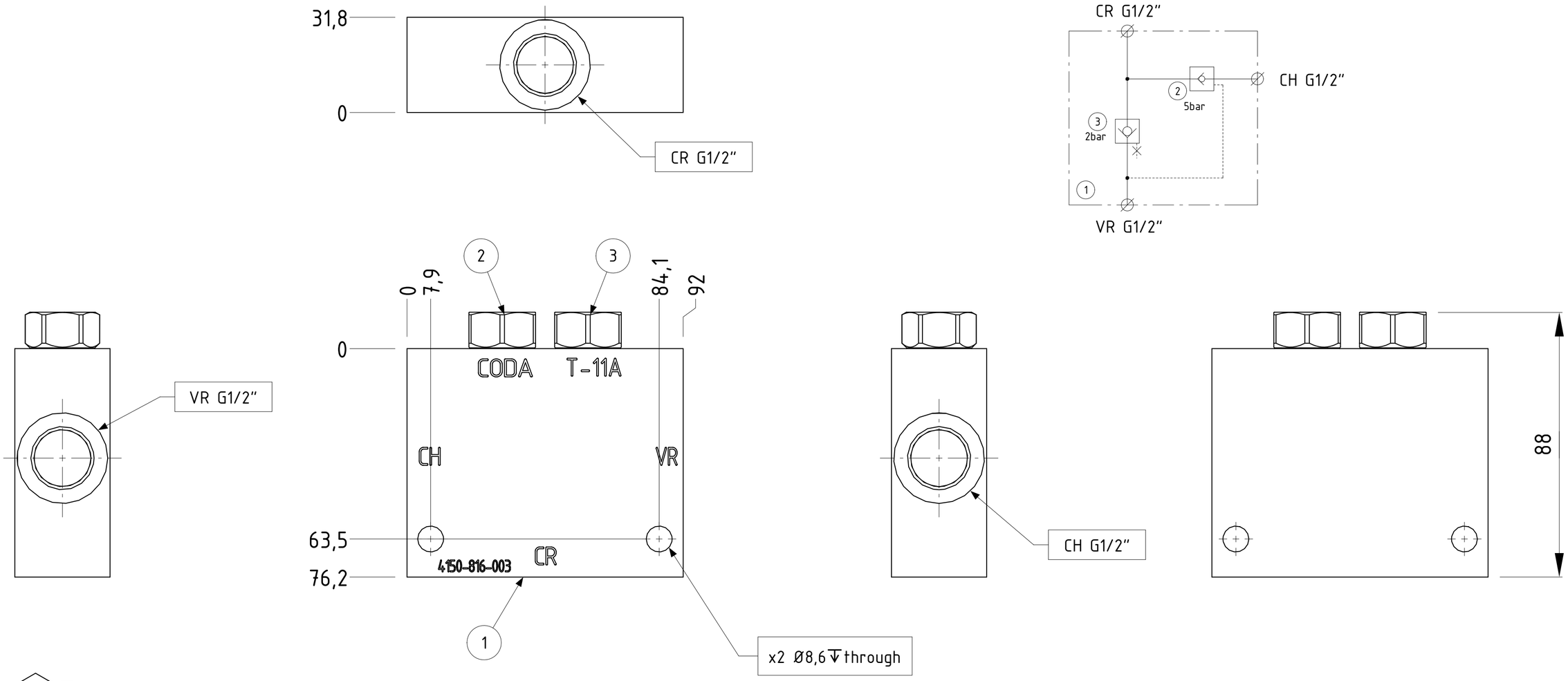


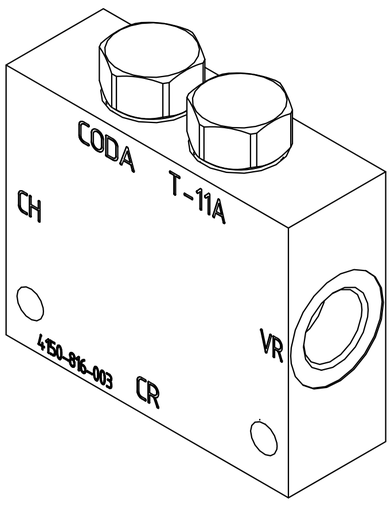


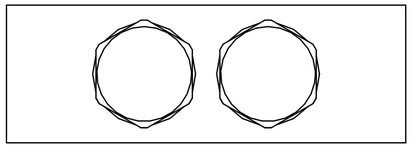

| # | Qty | Part Number | Description | Hydnet art nr | [kg] | Installation |
|---|---|---|---|---|---|---|
| 3 | 1 | CXCE-XCN T-11A 2bar | Backventil port 3 pluggad | 211-0173 | 0,12 | 45-50 Nm |
| 2 | 1 | CODA-XEN T-11A 5bar | Pilot to close backventil | 211-0128 | 0,13 | 45-50 Nm |
| 1 | 1 | 4150 816 003 2xT11A | Ventilhus G½" YDCC alu exl ventiler | 221-2163 | 0,4 | 2 x M8 |

ISO 2768-1 Medium, Ra=3,2µm
☐ Stamp framed text on surface, height = 4mm.
Sharp edges chamfered.

Material: Aluminium

Heat treat, finish: -

Status: RELEASED

Dimensions: ~92x88x77

Block: -

Hydnet art nr: 255-2125

Design: OBD | Drawn: OBD | Check: GCN

Net. weight: ~0,7 kg

See drawing: 3D04070

Hydnet HYDRAULIC INTELLIGENCE

1:st angle projection

Depth ↧

Title: Full time regenerativt ventilblock G1/2" Aluminium

Scale: 1:1 | Size: A2 | Created date: 2022-02-18

Drawing: L04071.icd | Sheet 1(1) | Rev. -

This drawing and the design is the property of Hydnet AB and must not be disclosed to any third person without our written permission.