SHEET 1 OF 1	REV A	PART NO. B210-16V-J03

REFER TO SUN HYDRAULICS TECHNICAL LITERATURE AND CATALOGUE FOR DETAILS OF CARTRIDGE STANDARD SETTINGS, ADJUSTMENT RANGES, MAXIMUM PRESSURE RATINGS, SEAL MATERIAL, TORQUE VALUES, ETC.

ENGINEERING VALIDATION REQUIRED
1. AFTER STAMPING
2. AFTER MANIFOLD FINISH

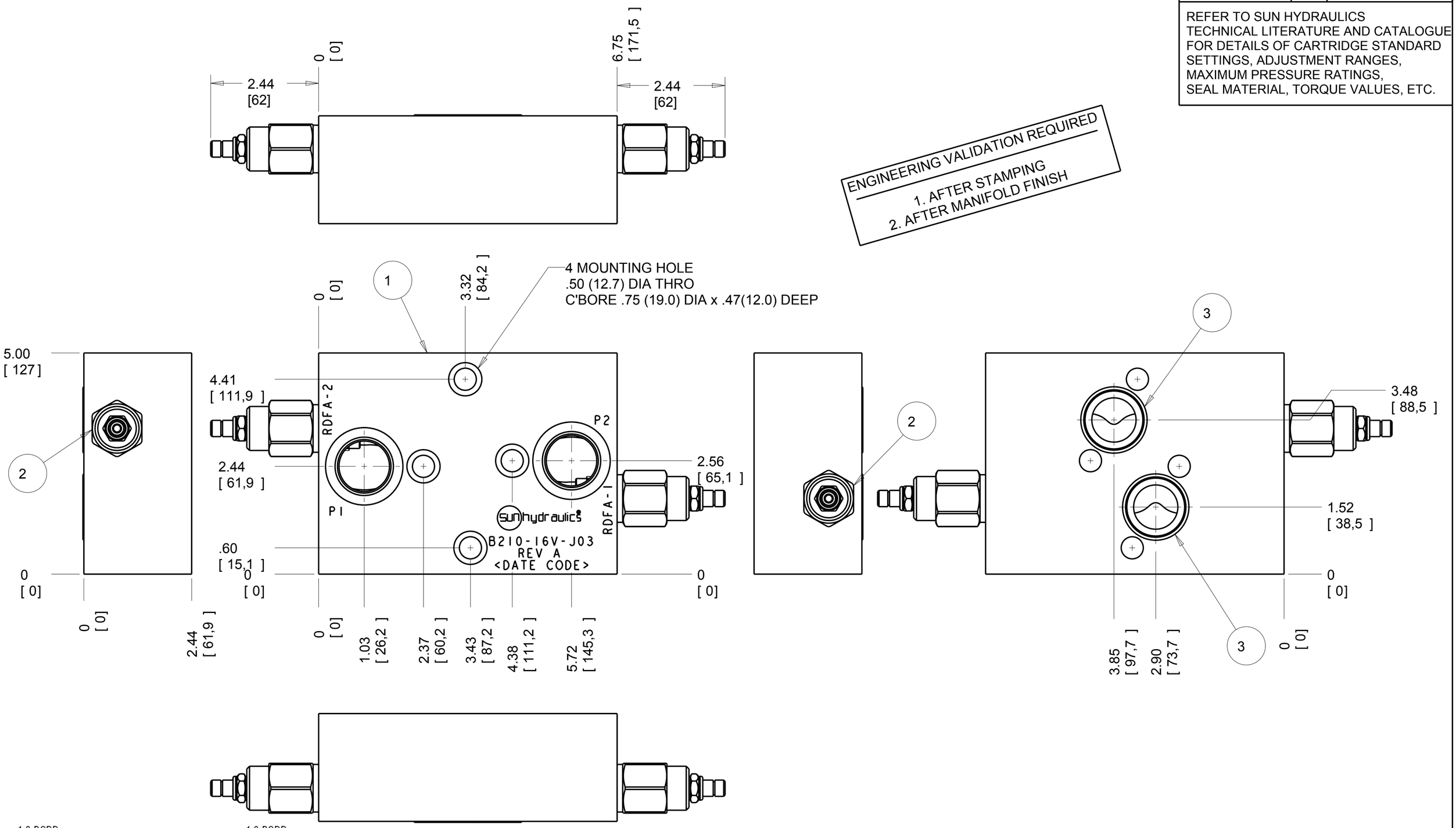

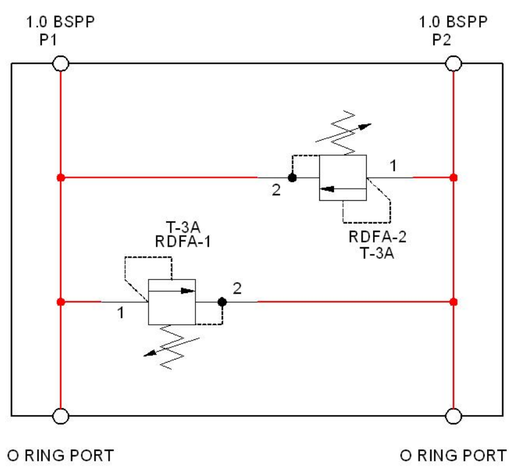

ITEM	PART NO.	SETTING	MATERIAL	PART NAME	QTY
3	500-001-028		BUNA-N	1.500 OD NOM O RING	2
2	RDFA-LAN			RELIEF VALVE	2
1	177-099		6061-T6 ALUMINUM	BODY	1

LET	REVISION	DATE	DRN	CHK	REL
A	INITIAL RELEASE		DRC		

DIMENSION TOL .XX = ± .015 .XXX = ± .005 ANGLE TOL ± 1° FINISH 80 ✓ REMOVE ALL BURRS .005 MAX. BREAK

PRO/E

TITLE	REV	PART NO.
OMV MOUNTED CROSS LINE RELIEF MANIFOLD	A	B210-16V-J03

SCALE	REF.	MATERIAL
0.650	EQ206024 SUN HYD	SEE BOM

DRAWN	CHECK	RELEASE	HEAT TREAT & FINISH
DRC	MJ	UK04451	NONE
DATE 26Oct12	DATE 02NOV12	DATE 05NOV12	

sun hydraulics LIMITED
WHELER ROAD, WHITLEY, COVENTRY, CV3 4LA ENGLAND
TELEPHONE (024) 7621 7400

© 2012 SUN HYDRAULICS LTD