SHEET 1 OF 1	REV A	PART NO. B408-27V-J03

REFER TO SUN HYDRAULICS TECHNICAL LITERATURE AND CATALOGUE FOR DETAILS OF CARTRIDGE STANDARD SETTINGS, ADJUSTMENT RANGES, MAXIMUM PRESSURE RATINGS, SEAL MATERIAL, TORQUE VALUES, ETC.

UNCHECKED DRAWING
FOR CUSTOMER APPROVAL

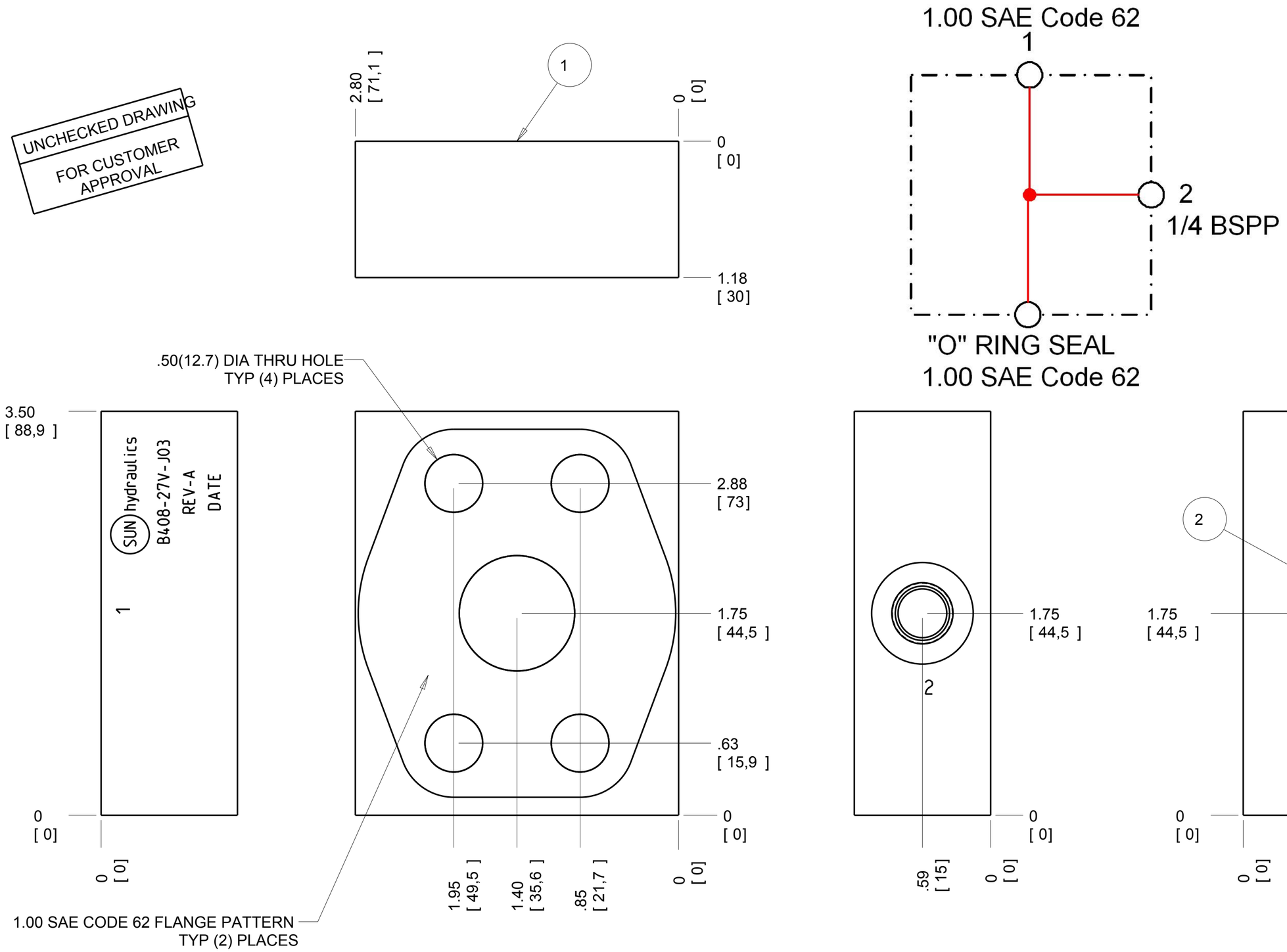

ITEM	PART NO.	SETTING	MATERIAL	PART NAME	QTY
2	500-001-219		BUNA-N	1.56 OD NOM "O" RING SEAL	1
1	179-345		DUCTILE IRON	BODY	1

LET	REVISION	DATE	DRN	CHK	REL
A	INITIAL RELEASE		AMG		

DIMENSION TOL
.XX = ± .015
.XXX = ± .005
ANGLE TOL ± 1°
FINISH 80 ✓
REMOVE ALL BURRS
.005 MAX. BREAK
PRO/E

TITLE	REV	PART NO.
1.00 SAE CODE 62 FLANGE WITH .250 BSPP PORT ADAPTOR PLATE	A	B408-27V-J03

SCALE	REF.	MATERIAL
1.500	EQ300737	SEE BOM

DRAWN	CHECK	RELEASE	HEAT TREAT & FINISH
AMG	***	UK300737	SUN BLACK
DATE 27AUG14	DATE ***	DATE ***	

SUN hydraulics LIMITED
WHELER ROAD, WHITLEY,
COVENTRY, CV3 4LA ENGLAND
TELEPHONE (024) 7621 7400

© 2014 SUN HYDRAULICS LTD